TM 9-1005-210-35P

DEPARTMENT OF THE ARMY TECHNICAL MANUAL

FIELD AND DEPOT MAINTENANCE
REPAIR PARTS
AND SPECIAL TOOL LIST FOR

CARBINE, CALIBER .30, M1,

CARBINE, CALIBER .30, M2,

HEADQUARTERS, DEPARTMENT OF THE ARMY
OCTOBER 1963

*TM 9-1005-210-35P

DEPARTMENT OF THE ARMY TECHNICAL MANUAL

FIELD AND DEPOT MAINTENANCE REPAIR PARTS AND SPECIAL TOOL LISTS FOR CARBINE, CALIBER .30: M1 AND M2

Headquarters, Department of the Army, Washington 25, D.C.

17 October 1963

			Page
SECTION	I.	PREFACE	1
	II.	REPAIR PARTS AND SPECIAL TOOLS	
		Repair Parts for:	
		Carbine, caliber .30 M1 and M2	7
		Stock group	9
		Trigger housing group (M1 only)	10
		Trigger housing group (M2 only)	12
		Bolt assembly	14
		Barrel and receiver group	15
		Oiler, carbine	16
		Cleaning rod	16
		Special Packaging Materiel	16
		Miscellaneous Equipment	16
		Tools and Equipment Authorized for Unit Replacement for Lower Echelon	17
		Tools and Equipment	18

SECTION I

PREFACE

1. General

a. This manual is a list of:

(1) Items authorized for initial stockage at field maintenance and supply support activities. Also listed are additional repair parts which may be required for performing authorized field maintenance but are to be requisitioned as required.

(2) Repair parts recommended for the overhaul of one hundred components or end items of equipment. Also listed are additional repair parts which may be required for performing authorized depot maintenance but are to be requisitioned, when required, if not obtainable from reclamation, controlled cannibalization, fabrication, or local procurement.

b. For prices of items listed herein, see the appropriate supply manual SM 9-2-1

*This manual supersedes DA Supply Manual ORD 8 SNL B28, 23 May 1957 and ORD 9 SNL B28, 10 August 1949, including C1, 14 July 1954.

and SM 9-2-2. Prices of items that are the responsibility of commodity commands may be obtained from the appropriate type 2 supply manuals for those services.

c. Additional applications of items in this manual are listed in the supply manual of the SM 9-3 series.

2. Requisition Notes

a. When requisitioning an item, the requisitioning agency will order the *listed* item. However, the commodity command will take necessary action to issue the exhaust stock item until stock is exhausted, whether it be an individual item, kit, set, or assembly.

b. Requisitions for replacement of items that are the responsibility of commodity commands will be submitted to the commodity command indicated in column 1a, Materiel Numerical Code.

c. If the exact item requisitioned is not furnished or if other action is necessary, the exact nature of the action taken by the commodity command will be indicated by standard symbols on prescribed forms.

3. Explanation of Columns

a. Source, Maintenance and Recoverability Code (Col. 1).

(1) *Materiel numerical code (col. 1a).* This column indicates the materiel numerical code, other than Ordnance materiel, assigned supply responsibility for the listed item. When no code is indicated the item is considered Ordnance. Commodity command responsible for supply of items in this list is:

Code	*Type Materiel*
10	Quartermaster Materiel

(2) *Source (col. 1b).* This column indicates the selection status and source for the listed item. Source codes used in this list are:

Code	*Explanation*
P	Requisition from the depot system of the responsible commodity command (applies to high mortality parts).
P1	Requisition from the depot system of the responsible commodity command (applies to low mortality parts).

(3) *Maintenance level (col. 1c).* This column indicates the lowest maintenance echelon authorized to install the listed item. Maintenance level codes used in this list are:

Code	*Explanation*
O	Organizational maintenance (1st & 2d echelon).
F	Field maintenance (4th echelon).
D	Depot maintenance (5th echelon).

(4) *Recoverability (col. 1d).* This column indicates whether unserviceable items should be returned for recovery or salvage. When no code is indicated, the item will be considered expendable. Recoverability codes used in this list are:

Code	*Explanation*
R	Items which are economically repairable at field maintenance activities (3d and 4th echelon) and are normally furnished by supply on an exchange basis. Gages will be forwarded to Gage Laboratory in accordance with SB 9-75.

b. Federal Stock Number (Col. 2). This column indicates the Federal stock number which has been assigned by the Cataloging Division, Defense Logistics Services Center.

c. Description (Col. 3). This column indicates the Federal item name (shown in capital letters) and any additional description required for supply operations. The abbreviations "w/e" (with equipment), when used as a portion of the nomenclature, indicates that the end item (major item) or major combination includes all armament, equipment, accessories, and repair parts issued with the item. The commodity command or manufacturer's part number is also included for reference.

d. Unit of Issue (Col. 4). This column indicates the quantity to be requisitioned.

e. Quantity Incorporated in Unit (Col. 5). This column indicates the number of times the listed item is used in the functional unit.

f. 15-Day Maintenance Allowance (Col. 6).

(1) *Field maintenance per 100 equipments.* This column indicates repair part allowance factors for field maintenance. These factors represent the estimated average quantities required to provide maintenance and, where applicable, supply support for 100 equipments for a 15-day period under combat conditions. The exact quantity authorized must be computed as instructed in (2) below.

(a) When an allowance factor is inclosed in parentheses, the item is designated as a "combat essential item of a critical nature" and must be stocked at all times, regardless of demand.

(b) Additional repair parts which may be required for performing authorized maintenance but not authorized for stockage in the prescribed load, are indicated by an asterisk (*). These items are to be requisitioned as required for immediate use only.

(c) Where no quantity is shown, reference should be made to the first appearance of the item as indicated in the description column.

Note. The 15-day level is not applicable to special tools for field and depot maintenance.

(2) *Computation of authorized quantities.* To compute the exact quantities authorized using the allowance factors multiply the number of equipments supported by the allowance factor. Then divide by 100.

Example: If the number of equipments supported is .. 30
and the allowance factor for 100 equipments is x1.9
The resulting product is 57.0

Divide this by 100 (this may be accomplished by moving the decimal point two places toward the left thus: .570 or 0.570. When the resulting fractional value is *.5 or larger,* it will be rounded off to the next higher whole number.

Example: If 1.77 is obtained, a quantity of 2 is authorized. When the resulting fractional value is *below .5,* it will be rounded to the next lower whole number.

Example: If 3.4 is obtained, a quantity of 3 is authorized.

g. Depot Maintenance Guide per 100 Equipments (Col. 7).

(1) This column indicates repair part allowance factors for depot maintenance. These factors represent recommended quantities required to overhaul 100 components or end items of equipment.

(2) The exact quantity authorized must be computed as instructed in *f*(2) above. Additional repair parts which may be required for performing authorized maintenance are indicated by an asterisk (*). These items are to be requisitioned, when required for immediate use only. Where no quantity is shown, reference should be made to the first appearance of the item as indicated in the "description" column.

Note. The 15-day level is not applicable to tools and equipment for field and depot maintenance personnel.

h. Illustration (Col. 8).

(1) This column indicates the figure number of the illustration that depicts the listed item. When more than one item appears on

an illustration, the item number is also indicated.

(2) Items that appear on the illustrations and in the legends of the illustrations but which are not listed in the tabular listing are non-supply parts and are not authorized.

4. Abbreviations

Abbreviation	*Explanation*
assy	assembly (ies)
cal	caliber (s)
cc	cubic centimeter (s)
cham	chamfer
deg	degree(s)
dia	diameter (s)
fl-fil-hd	flat fillister head
gnd	ground
id	inside diameter (s)
in.	inch (es)
lb	pound (s)
lg	length (long)
max	maximum
mfr	manufacturer (s)
min	minute (s)
od	outside diameter (s)
phos-fin	phosphate finish
S	steel
sq	square
stk	stock
syn-ru	synthetic rubber
thk	thick (ness)
TPI	threads per inch
VCI	volatile corrosion inhibitor
w/	with

5. Suggestions and Recommendations

The direct reporting of errors, omissions and recommendations for improving this equipment manual by the individual user is authorized and encouraged. DA Form 2028 will be used for reporting these improvements. The form may be completed using pencil, pen or typewriter. DA Forms 2028 will be completed in triplicate and forwarded to: Commanding General, Headquarters, U. S. Army Weapons Command, Rock Island Arsenal, Rock Island, Illinois, ATTN: AMSWE-SMM. One information copy will be provided to the individual's immediate supervisor (e.g., officer, noncommissioned officer, supervisor, etc.).

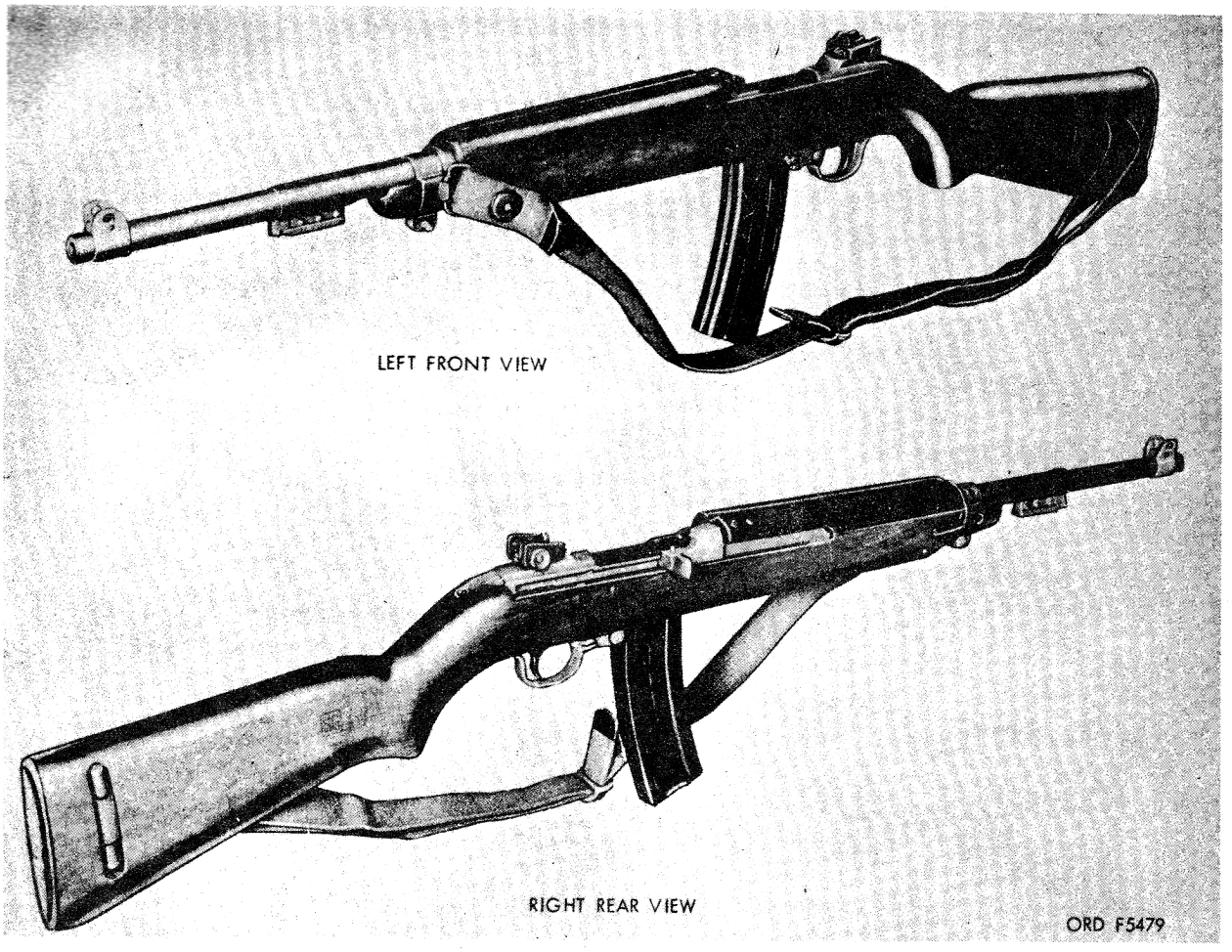

Figure 1. Caliber .30 carbine M1 with sling and oiler.

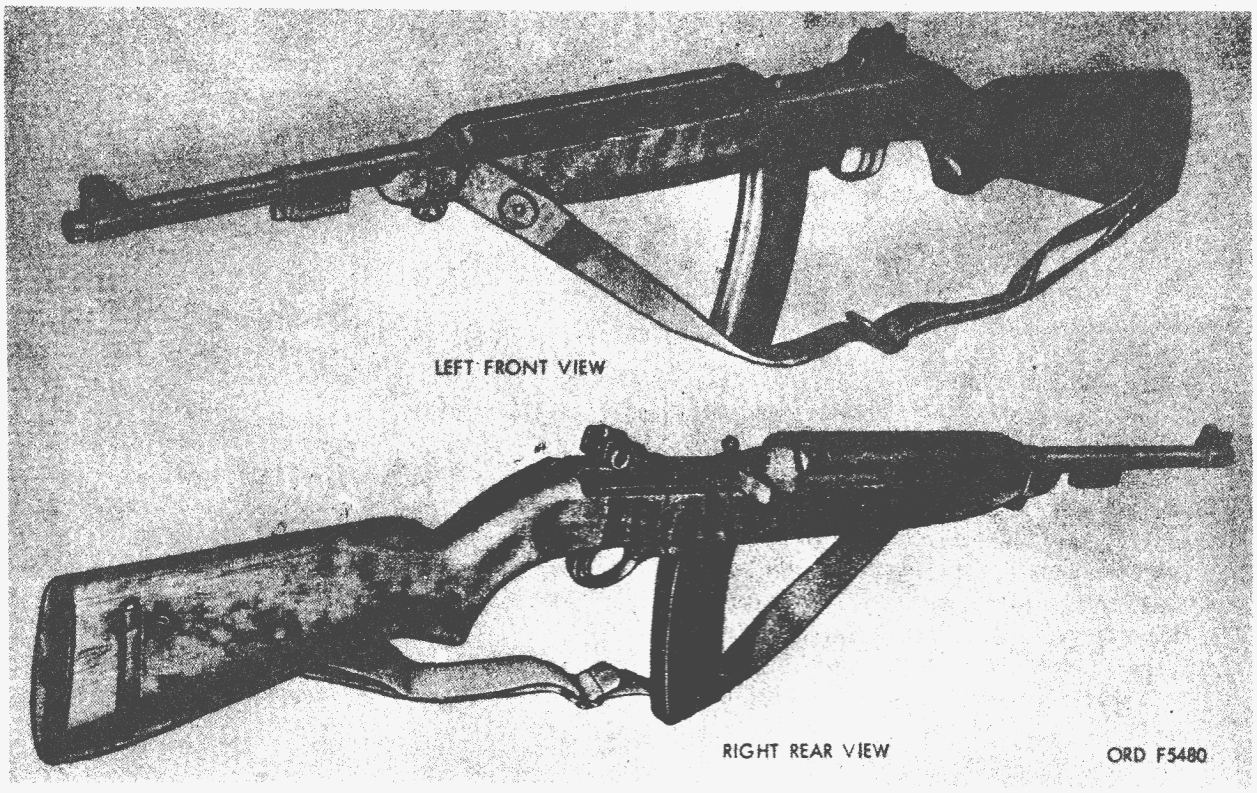

Figure 2. Caliber .30 carbine M2 with sling and oiler.

Section II. REPAIR PARTS AND SPECIAL TOOLS

(1) Source, maintenance, and recoverability code				(2)	(3)	(4)	(5)	(6) 15-Day maintenance allowance per 100 equipments		(7)	(8) Illustration	
(a) Material numerical code	(b) Source	(c) Maintenance level	(d) Recoverability	Federal stock No.	Description	Unit of issue	Quantity incorporated in unit	(a) 3d Echelon (direct support)	(b) 4th Echelon (heavy support)	Depot maintenance guide per 100 equipments (5th echelon)	(a) Figure No.	(b) Item No.
					REPAIR PARTS FOR: CARBINE, CAL. .30, M1 and M2							
	P	O	---	1005-621-2602	GUARD, HAND, GUN: walnut or birch, 4 rivets (6212602).	1	1	(1.5)	(0.5)	24	3	2
	P	O	---	1005-620-0985	GUIDE, OPERATING SLIDE SPRING: (6200985).	1	1	(1.5)	(0.5)	5	3	11
	P1	F	---	1005-716-1830	LEVER, DISCONNECTOR: (mfr assy) (7161830) (M2 only).	1	1	(0.8)	(0.2)	21	3	6
	P	O	---	1005-716-2176	MAGAZINE, CARTRIDGE: (7162176).	1	1	(9.4)	(3.1)	15	3	1
	P	O	---	5315-519-6450	PIN, STRAIGHT, HEADED: S, phos-fin., 0.178 in. min dia, 0.179 in. max dia, (60 deg cham) (trigger housing) (5166450) (M1 only).	1	1	(1.5)	(0.5)	8	3	12
	P1	F	---	1005-716-1838	SELECTOR, RATE: (7161838) (M2 only).	1	1	(0.7)	(0.3)	20	3	5
	P1	F	---	1005-716-1843	SLIDE, OPERATING: (7161843) --	1	1	(0.7)	(0.3)	3	3	7
	P	O	---	1005-519-6466	SPRING, HELICAL, COMPRESSION: S, 0.036 dia stk, 0.256 od, 121 coils, operating slide (5196466).	1	1	(3.0)	(1.0)	100	3	10
	P1	F	---	1005-731-2453	SPRING, HELICAL, COMPRESSION: S, 0.022 dia stk, 0.128 od, 8 coils, operating slide stop (7312453).	1	1	(0.7)	(0.3)	55	3	9
	P	O	---	1005-716-1839	SPRING, SELECTOR: (7161839) (M2 only).	1	1	(2.4)	(0.7)	45	3	4
	P1	F	---	1005-731-2452	STOP, OPERATING SLIDE: (7312452).	1	1	(0.7)	(0.3)	42	3	8

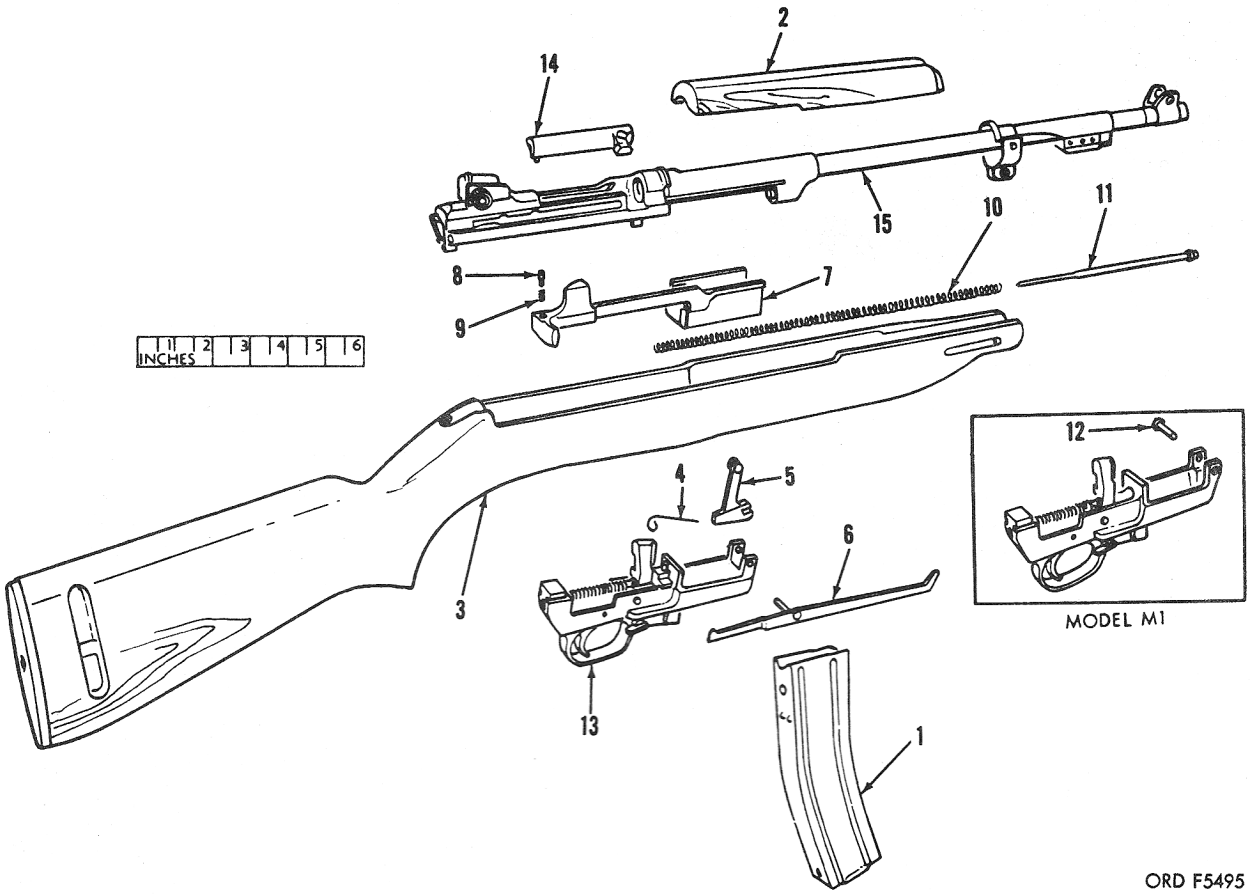

3—Stock group
13—Trigger housing group
14—Bolt assembly 7162897
15—Barrel and receiver group

Figure 3. Caliber .30 M1 and M2 carbines - exploded view.

(1) Source, maintenance, and recoverability code				(2)	(3)	(4)	(5)	(6) 15-Day maintenance allowance per 100 equipments		(7)	(8) Illustration	
(a) Material numerical code	(b) Source	(c) Maintenance level	(d) Recoverability	Federal stock No.	Description	Unit of issue	Quantity incorporated in unit	(a) 3d Echelon (direct support)	(b) 4th Echelon (heavy support)	Depot maintenance guide per 100 equipments (5th echelon)	(a) Figure No.	(b) Item No.
					REPAIR PARTS FOR:							
					CARBINE, CAL. .30, M1 and M2—Continued							
					Stock Group							
	P1	F	---	1005-620-0997	PLATE, BUTT, SHOULDER GUN: (6200997).	1	1	0.8	0.2	---	4	2
	P1	F	---	1005-614-6873	SCREW, BUTT PLATE, SMALL: special, wood, S, 0.212 dia, 10 TPI, 0.925 over-all (6146873).	1	1	*	*	6	4	1
	P1	F	---	1005-519-6484	SPRING, LOCKING, RETAINING BAND: (5196484).	1	1	(0.7)	(0.3)	9	4	3
	P1	F	---	1005-716-1845	STOCK, GUN, SHOULDER: (7161845).	1	1	(0.7)	(0.3)	21	4	4

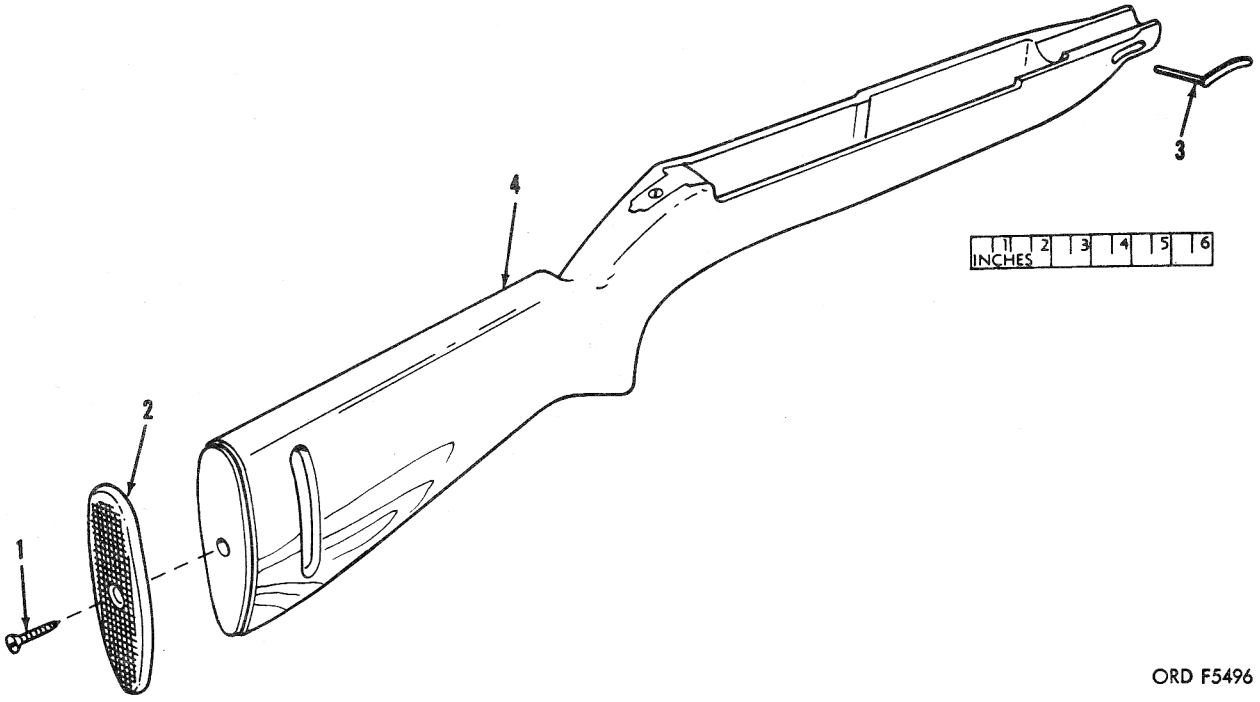

Figure 4. Stock group for M1 and M2 carbines.

(1) Source, maintenance, and recoverability code				(2)	(3)	(4)	(5)	(6) 15-Day maintenance allowance per 100 equipments		(7)	(8) Illustration	
(a) Material numerical code	(b) Source	(c) Maintenance level	(d) Recoverability	Federal stock No.	Description	Unit of issue	Quantity incorporated in unit	(a) 3d Echelon (direct support)	(b) 4th Echelon (heavy support)	Depot maintenance guide per 100 equipments (5th echelon)	(a) Figure No.	(b) Item No.
					REPAIR PARTS FOR: CARBINE, CAL. .30, M1 Trigger Housing Group							
	P	F	---	1005-716-1842	CATCH, MAGAZINE: (7161842) --	1	1	(1.0)	(0.3)	27	5	11
	P1	O	---	1005-565-3447	HAMMER, FIRING, SMALL ARMS: (5653447).	1	1	(0.8)	(0.2)	14	5	5
	P1	D	---	1005-716-1828	HOUSING, TRIGGER: (7161828) --	1	1	-----	-----	3	5	15
	P	O	---	5315-519-6449	PIN, STRAIGHT, HEADED: S, fl-fil-hd, 0.159 in. min dia, 0.160 in. max dia, 45 deg cham (hammer) (5196449).	1	1	(1.5)	(0.5)	6	5	4
	P	O	---	5315-519-6450	PIN, STRAIGHT, HEADED: S, phos-fin., 0.178 in. min dia, 0.179 in. max dia, (60 deg cham) (trigger housing) (5166450) (See item 12, fig. 3).	---	---	-----	-----	---	5	1
	P	F	---	5315-519-6453	PIN, STRAIGHT, HEADLESS: S, phos-fin., 0.124 min dia, 0.125 max dia (trigger) (5196453).	1	1	(1.5)	(0.5)	11	5	6
	P	O	---	1005-620-0981	PLUNGER, HAMMER SPRING: (6200981).	1	1	(1.5)	(0.5)	5	5	3
	P	O	---	1005-614-7695	PLUNGER ASSEMBLY, MAGAZINE CATCH: (6147695).	1	1	(1.5)	(0.5)	26	5	12
	P1	F	---	1005-716-0472	PLUNGER ASSEMBLY, MAGAZINE CATCH RETAINER: w/plunger, safety (7160472).	1	1	(0.8)	(0.2)	21	5	13
	P1	F	---	1005-716-2080	SAFETY, SMALL ARMS: (7162080)	1	1	(0.4)	(0.1)	20	5	14
	P	O	---	1005-716-1841	SEAR: (7161841) ----------	1	1	(2.4)	(0.7)	30	5	7
	P	O	---	1005-537-7921	SPRING, HELICAL, COMPRESSION: S, 0.042 dia stk, 0.280 od, 26.5 coils, hammer (5377921).	1	1	(3.0)	(1.0)	100	5	2
	P	O	---	1005-537-7984	SPRING, HELICAL, COMPRESSION: S, 0.023 dia stk, 0.143 od, 15 coils (5377984).	1	1	(3.0)	(1.0)	100	5	8
	P	O	---	1005-519-6459	SPRING, HELICAL, TORSION: trigger (5196459).	1	1	(2.4)	(0.7)	31	5	10
	P1	F	---	1005-620-0988	TRIGGER: (6200988) ----------	1	1	(0.7)	(0.3)	12	5	9

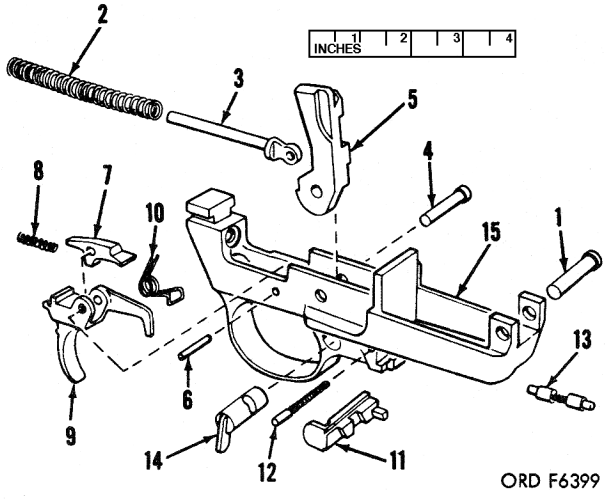

Figure 5. Trigger housing group for M1 carbine.

(1) Source, maintenance, and recoverability code				(2)	(3)	(4)	(5)	(6) 15-Day maintenance allowance per 100 equipments		(7)	(8) Illustration	
(a) Material numerical code	(b) Source	(c) Maintenance level	(d) Recoverability	Federal stock No.	Description	Unit of issue	Quantity incorporated in unit	(a) 3d Echelon (direct support)	(b) 4th Echelon (heavy support)	Depot maintenance guide per 100 equipments (5th echelon)	(a) Figure No.	(b) Item No.
					REPAIR PARTS FOR: CARBINE, CAL. .30, M2 Trigger Housing Group							
	P1	F	---	1005-716-1842	CATCH, MAGAZINE: (7161842) --	1	1	(1.0)	(0.3)	27	6	15
	P1	F	---	1005-716-1837	DISCONNECTOR, TRIGGER HOUSING: (7161837).	1	1	(0.7)	(0.3)	19	6	8
	P1	O	---	1005-716-1840	HAMMER, FIRING, SMALL ARMS: (7161840).	1	1	(0.4)	(0.1)	20	6	7
	P1	D	---	1005-716-1828	HOUSING, TRIGGER: (7161828) --	1	1	-----	-----	3	6	19
	P1	F	---	1005-716-1830	LEVER, DISCONNECTOR: (mfr assy) (7161830) (See item 6, fig. 3).	---	---	-----	-----	---	6	3
	P	O	---	5315-519-6449	PIN, STRAIGHT, HEADED: S, fl-fil-hd, 0.159 in. min dia, 0.160 in. max dia, 45 deg cham (hammer) (5196449).	1	1	(1.5)	(0.5)	6	6	6
	P	F	---	5315-519-6453	PIN, STRAIGHT, HEADLESS: S, phos-fin., 0.124 min dia, 0.125 max dia (trigger) (5196453).	1	1	(1.5)	(0.5)	11	6	10
	P	O	---	1005-716-2782	PLUNGER, DISCONNECTOR SPRING: (mfr assy) (7162782).	1	1	(1.5)	(0.5)	7	6	9
	P	O	---	1005-620-0981	PLUNGER, HAMMER SPRING: (6200981).	1	1	(1.5)	(0.5)	5	6	5
	P	O	---	1005-614-7695	PLUNGER ASSEMBLY, MAGAZINE CATCH: (6147695).	1	1	(1.5)	(0.5)	26	6	16
	P1	F	---	1005-716-0472	PLUNGER ASSEMBLY, MAGAZINE CATCH RETAINER: w/plunger, safety (7160472).	1	1	(0.8)	(0.2)	21	6	17
	P1	F	---	1005-716-2080	SAFETY, SMALL ARMS: (7162080)	1	1	(0.4)	(0.1)	20	6	18
	P	O	---	1005-716-1841	SEAR: (7161841) ----------	1	---	(2.4)	(0.7)	30	6	11
	P1	F	---	1005-716-1838	SELECTOR, RATE: (7161838) (See item 5, fig. 3).	---	---	-----	-----	---	6	2
	P	O	---	1005-537-7921	SPRING, HELICAL, COMPRESSION: S, 0.042 dia stk, 0.280 od, 26.5 coils, hammer (5377921).	1	---	(3.0)	(1.0)	100	6	4
	P	O	---	1005-537-7984	SPRING, HELICAL, COMPRESSION: S, 0.023 dia stk, 0.143 od, 15 coils (5377984).	1	---	(3.0)	(1.0)	100	6	12
	P	O	---	1005-519-6459	SPRING, HELICAL, TORSION: trigger (5196459).	1	1	(2.4)	(0.7)	31	6	14
	P	O	---	1005-716-1839	SPRING, SELECTOR: (7161839) (See item 4, fig. 3).	---	---	-----	-----	---	6	1
	P1	F	---	1005-620-0988	TRIGGER: (6200988) ----------	1	1	(0.7)	(0.3)	12	6	13

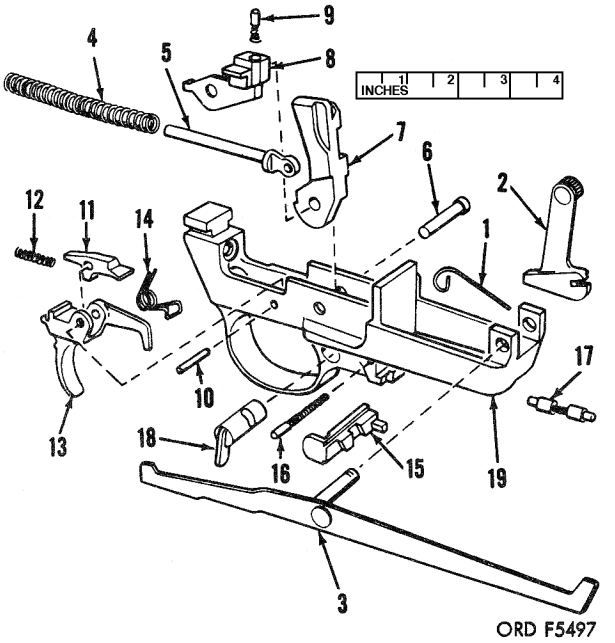

Figure 6. Trigger housing group for M2 carbine.

(1) Source, maintenance, and recoverability code				(2)	(3)	(4)	(5)	(6) 15-Day maintenance allowance per 100 equipments		(7)	(8) Illustration	
(a) Material numerical code	(b) Source	(c) Maintenance level	(d) Recoverability	Federal stock No.	Description	Unit of issue	Quantity incorporated in unit	(a) 3d Echelon (direct support)	(b) 4th Echelon (heavy support)	Depot maintenance guide per 100 equipments (5th echelon)	(a) Figure No.	(b) Item No.
					REPAIR PARTS FOR:							
					CARBINE, CAL. .30, M1 and M2—Continued							
					Bolt Assembly							
	P1	F	---	1005-716-0092	BOLT, BREECH: (7160092) ------	1	1	(0.8)	(0.2)	7	7	6
	P	O	---	1005-621-2601	EJECTOR, SMALL ARMS CARTRIDGE: (6212601).	1	1	(1.5)	(0.5)	15	7	4
	P	O	---	1005-620-0987	EXTRACTOR, SMALL ARMS CARTRIDGE: (6200987).	1	1	(1.5)	(0.5)	25	7	1
	P	O	---	1005-620-0976	PIN, FIRING: (6200976) ---------	1	1	(3.0)	(1.0)	40	7	5
	P	O	---	1005-519-6437	PLUNGER, EXTRACTOR SPRING: (5196437).	1	1	(2.4)	(0.7)	32	7	2
	P1	D	---	1005-519-6462	SPRING, HELICAL, COMPRESSION: S, 0.026 dia stk, 0.122 od, 27.5 coils, ejector (5196462).	1	1	-----	-----	100	7	4B
	P1	O	---	1005-313-9442	SPRING, HELICAL, COMPRESSION: S, 0.026 dia stk, 0.123 od, 10 coils, extractor plunger (7267690).	1	1	(0.8)	(0.2)	100	7	3

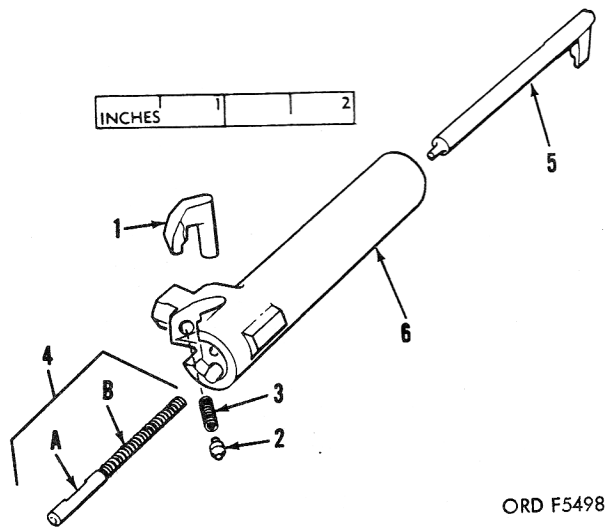

4A—Ejector 6200989

Figure 7. Bolt assembly for M1 and M2 carbines.

(1) Source, maintenance, and recoverability code				(2)	(3)	(4)	(5)	(6) 15-Day maintenance allowance per 100 equipments		(7)	(8) Illustration	
(a) Material numerical code	(b) Source	(c) Maintenance level	(d) Recoverability	Federal stock No.	Description	Unit of issue	Quantity incorporated in unit	(a) 3d Echelon (direct support)	(b) 4th Echelon (heavy support)	Depot maintenance guide per 100 equipments (5th echelon)	(a) Figure No.	(b) Item No.
					REPAIR PARTS FOR: Continued							
					CARBINE, CAL. .30, M1 and M2— Barrel and Receiver Group							
	P	F	---	1005-716-0963	BAND, RETAINING, GUN HAND GUARD AND STOCK: front (7160963).	1	1	(1.5)	(0.5)	10	8	3B
	P1	D	---	1005-555-7154	BARREL ASSEMBLY, CARBINE: (5557154).	1	1	-----	-----	14	8	3
	P1	F	---	1005-519-6451	KEY, FRONT SIGHT: (5196451)---	1	1	(0.8)	(0.2)	13	8	3C
	P1	F	---	1005-519-6436	NUT, PISTON: (5196436) --------	1	1	(0.8)	(0.2)	13	8	3G
	P1	F	---	5315-519-6482	PIN, STRAIGHT, HEADLESS: S, gnd, 0.1245 min dia, 0.1250 max dia, 1/64 lg (front sight) (5196482).	1	1	(0.8)	(0.2)	9	8	3D
	P1	F	---	1005-519-6446	PISTON, GUN GAS CYLINDER: (5196446).	1	1	(0.8)	(0.2)	7	8	3F
	P1	F	---	5305-299-1269	SCREW, FRONT BAND: (7160004)	1	1	0.8	0.2	20	8	3B(1)
	P1	F	---	1005-620-0995	SIGHT, FRONT: (6200995) -------	1	1	(0.6)	(0.2)	17	8	3E
	P1	F	---	1005-657-3955	SIGHT, REAR: adjustable (6573953).	1	1	(0.7)	(0.3)	24	8	1
					OR							
	P1	F	---	1005-716-0060	SIGHT, REAR: adjustable (7160060).							

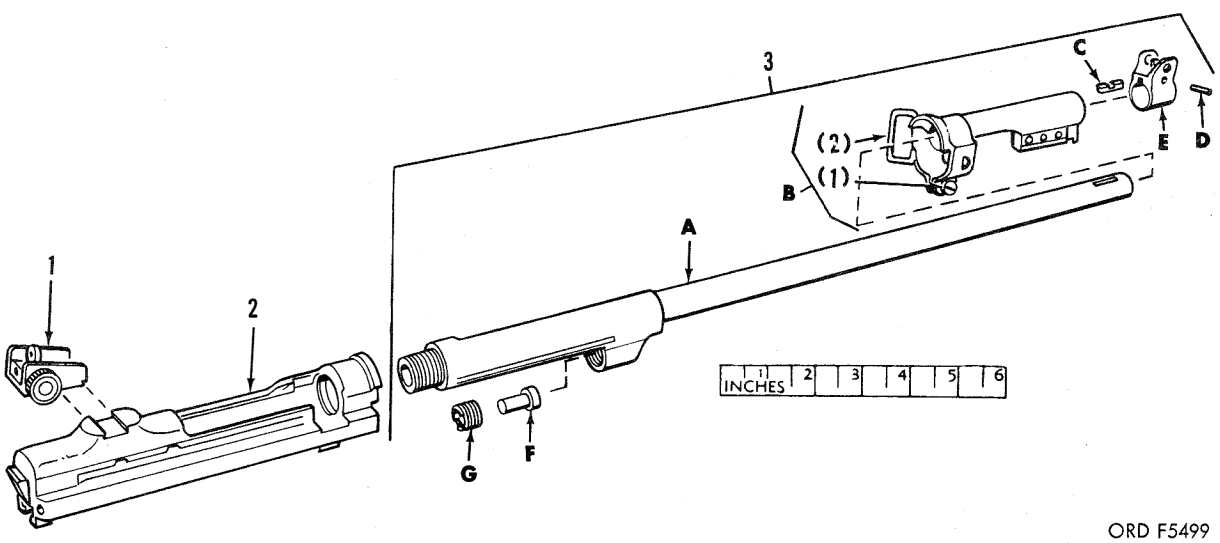

2—Receiver 7265615
3A—Barrel 5564365 or 7265616
3B(2)—Body group

Figure 8. Barrel and receiver group for M1 and M2 carbines.

(1) Source, maintenance, and recoverability code				(2)	(3)	(4)	(5)	(6) 15-Day maintenance allowance per 100 equipments		(7)	(8) Illustration	
(a) Material numerical code	(b) Source	(c) Maintenance level	(d) Recoverability	Federal stock No.	Description	Unit of issue	Quantity incorporated in unit	(a) 3d Echelon (direct support)	(b) 4th Echelon (heavy support)	Depot maintenance guide per 100 equipments (5th echelon)	(a) Figure No.	(b) Item No.
					REPAIR PARTS FOR:							
					CARBINE, CAL. .30, M1 and M2—Continued							
					ITEMS REQUIRED FOR ENGINEER CORPS							
					The following items are required when the Sniperscope, M2, mount, assembly, is installed on the Carbine, M2 (Items shall be requisitioned as required).							
	P	O	---	1005-317-2479	GUARD, HAND, GUN: (7267170) --	---	1					
	P	O	---	5310-716-1244	SCREW, SELF LOCKING: (7161244)	---	1					
	P	O	---	1005-317-2480	STOCK, GUN, SHOULDER: (7267171).	---	1					
					OILER, CARBINE							
	P	O	---	1005-519-6456	GASKET: syn-ru, 0.200 in. id, 0.383 in. od, 0.060 in. thk, oiler tube (5196456).	---	1	(2.4)	(0.7)	8	9	5B
					ROD, CLEANING, SMALL ARMS, JOINTED, M8							
	P	O	---	1005-726-6110	SWAB HOLDER SECTION, SMALL ARMS CLEANING ROD: (7266110).	1	1	(2.0)	-----	---	9	6C
					SPECIAL PACKAGING MATERIEL							
					The volatile corrosion inhibitor treated items listed below are required for preservation when the barrel is packaged for shipment and storage.							
				1005-336-0226	BAG, BARRIER, VCI TREATED: liner (7265931).	1	---	*	*	100		
				1005-592-5806	BOX, FIBERBOARD, CORRUGATED: (7266158).	1	---	-----	-----	50		
				1005-336-0227	TUBE, BORE, VCI treated; (7266315).	1	---	*	*	100		
					MISCELLANEOUS EQUIPMENT							
				6920-713-8437	TARGET ROLL: 1000 in. range, roll of 500 per box (7138437).	BOX	---	-----	*			

(1) Source, maintenance, and recoverability code				(2)	(3)	(4)	(5)	(6) 15-Day maintenance allowance per 100 equipments		(7)	(8) Illustration	
(a) Material numerical code	(b) Source	(c) Maintenance level	(d) Recoverability	Federal stock No.	Description	Unit of issue	Quantity incorporated in unit	(a) 3d Echelon (direct support)	(b) 4th Echelon (heavy support)	Depot maintenance guide per 100 equipments (5th echelon)	(a) Figure No.	(b) Item No.
					TOOLS AND EQUIPMENT AUTHORIZED FOR UNIT REPLACEMENT FOR LOWER ECHELON							
					CARBINE, CAL. .30, M1 and M2							
				1005-556-4174	BRUSH, CLEANING, SMALL ARMS: bore (5564174).	1	---	—	-----	---	9	1
				1005-716-2546	CAP, MAGAZINE: (7162546) -----	1	---	—	-----	---	9	2
				1005-550-6573	CASE, SMALL ARMS CLEANING ROD: (5506573).	1	---	—	-----	---	9	3
10	---	---	---	9150-248-3480	GREASE, RIFLE: mineral oil and calcium soap, 5 cc tube (14-G-1435-910) (5621059).	1	---	—	-----	---	9	4
				1005-556-4364	OILER, CARBINE: (5564364) -----	1	---	—	-----	---	9	5
				1005-654-4045	ROD, CLEANING, SMALL ARMS: jointed, M8 (6544045).	1	---	—	-----	---	9	6
				1005-555-7152	SLING, SMALL ARMS: (webbing) (5557152).	1	---	—	-----	---	9	7
				4933-716-0026	TOOL, REMOVING, TRIGGER SPRING: (7160026).	1	---	—	-----	---	10	10
				4933-731-3298	TOOL ASSEMBLY, BOLT, CARBINE: assembling and disassembling, cal. .30 (7313298).	1	---	—	-----	---	10	5
				4933-562-1065	WRENCH, SPANNER: removing, gas piston nut, M5 (5621065).	1	---	—	-----	---	10	9

(1) Source, maintenance, and recoverability code				(2)	(3)	(4)	(5)	(6) 15-Day maintenance allowance per 100 equipments		(7)	(8) Illustration	
(a) Material numerical code	(b) Source	(c) Maintenance level	(d) Recoverability	Federal stock No.	Description	Unit of issue	Quantity incorporated in unit	(a) 3d Echelon (direct support)	(b) 4th Echelon (heavy support)	Depot maintenance guide per 100 equipments (5th echelon)	(a) Figure No.	(b) Item No.
					TOOLS AND EQUIPMENT The following items are requisitioned and issued, if not otherwise authorized, to Ordnance maintenance units performing maintenance support of the major item. Items may be requisitioned as required for replacement under their individual stock numbers. The 15-day level is not applicable.							
			R	4933-726-5826	TOOL SET, FIELD MAINTENANCE: for carbine cal. .30, M1 and M2.	1	---	*	*			
					Consisting of:							
			R	4933-731-9932	1—BOLT, FIELD TEST: cal. .30 (7319932).	1	---	-----	-----	---	10 11	1 1
			R	4933-731-9943	1—GAGE, HEADSPACE: cal. .30, 1.302 (7319943).	1	---	-----	-----	---	10	2
				5120-596-1107	3—PUNCH, CENTER SOLID: staking, 1/8 x 2 dia of point, 0.005 (7312234).	1	---	-----	-----	---	10	3
				4933-731-2068	1—TOOL, ASSEMBLING, ADJUSTABLE, REAR SIGHT: cal. .30 (7312068).	1	---	-----	-----	---	10	4
				4933-731-3298	1—TOOL ASSEMBLY, BOLT, CARBINE: assembling and disassembling, cal. .30 (7313298).	1	---	-----	-----	---	10	5
				4933-716-1313	1—TOOL, ASSEMBLING, FRONT SIGHT: cal. .30 (7161313).	1	---	-----	-----	---	10	6
				4933-716-0995	3—TOOL, GAS CYLINDER, RECONDITIONING: cal. .30 (7160995).	1	---	-----	-----	---	10	7
				4933-716-1237	1—TOOL, REMOVING, FRONT SIGHT: cal. .30 (7161237).	1	---	-----	-----	---	10	8
				4933-716-0026	1—TOOL, REMOVING, TRIGGER SPRING ASSEMBLY: (7160026).	1	---	-----	-----	---	10	10
				4933-562-1065	1—WRENCH, SPANNER: gas piston nut (5621065).	1	---	-----	-----	---	10	9
				5120-529-2552	1—WRENCH, TORQUE: indicating, 1/4 in. sq-drive, 60 in.-lb cap., in metal case (41-W-3628-80).	1	---	-----	-----	---	10 11	11 12
			R	4933-726-5825	TOOL SET, DEPOT MAINTENANCE: for carbine M1 and M2 (7265825).	1	---	-----	-----	*		
					Consisting Of:							
			R	4933-731-9932	1—BOLT, FIELD TEST: cal. .30 (7319932).	1	---	-----	-----	---	10 11	1 1
			R	4933-731-9936	1—GAGE, HEADSPACE: cal. .30, 1.295 (7319936).	1	---	-----	-----	---	11	2

(1) Source, maintenance, and recoverability code				(2)	(3)	(4)	(5)	(6) 15-Day maintenance allowance per 100 equipments		(7)	(8) Illustration	
(a) Material numerical code	(b) Source	(c) Maintenance level	(d) Recoverability	Federal stock No.	Description	Unit of issue	Quantity incorporated in unit	(a) 3d Echelon (direct support)	(b) 4th Echelon (heavy support)	Depot maintenance guide per 100 equipments (5th echelon)	(a) Figure No.	(b) Item No.
					TOOLS AND EQUIPMENT—Continued							
			R	4933-332-4199	2—GAGE, HEADSPACE: cal. .30, 1.298 (7319942).	1						
			R	4933-731-9934	2—GAGE, HEADSPACE: cal. .30, 1.290 (7319934).	1	---	-----	-----	---	11	3
				5120-596-1107	5—PUNCH, CENTER, SOLID: staking, 1/8 x 2 dia of point, 0.005 (7312234).	1	---	-----	-----	---	11	4
				4933-714-8683	3—REAMER ASSEMBLY, HEADSPACE: cal. .30 (7148683).	1	---	-----	-----	---	11	5
				4933-731-2068	2—TOOL, ASSEMBLING, ADJUSTABLE, REAR SIGHT: cal. .30 (7312068).	1	---	-----	-----	---	11	5
				4933-731-2068	2—TOOL, ASSEMBLING, ADJUSTABLE, REAR SIGHT: cal. .30 (7312068).	1	---	-----	-----	---	11	6
				4933-731-3298	2—TOOL ASSEMBLY, BOLT, CARBINE: assembling and disassembling, cal. .30 (7313298).	1	---	-----	-----	---	11	7
				4933-716-1313	2—TOOL, ASSEMBLING, FRONT SIGHT: cal. .30 (7161313).	1	---	-----	-----	---	11	8
				4933-716-0995	6—TOOL, GAS CYLINDER, RECONDITIONING: cal. .30 (7160995).	1	---	-----	-----	---	11	9
				4933-716-1237	2—TOOL, REMOVING, FRONT SIGHT: cal. .30 (7161237).	1	---	-----	-----	---	11	10
				4933-711-3308	3—WRENCH, RECEIVER AND BARREL: cal. .30 (7113308).	1	---	-----	-----	---	11	11
				5120-529-2552	2—WRENCH, TORQUE: indicating, 1/4 in. sq-drive, 60 in.-lb cap., in metal case (41-W-3628-80).	1	---	-----	-----	---	10 11	11 12
					SCREENS AND FIXTURES FOR COMPARATORS							
			R	4933-731-9811	1—FIXTURE, COMPARATOR: hammer contour, cal. .30 (7319811).	1	---	-----	-----	---	12	1
			R	4933-731-9882	1—FIXTURE, COMPARATOR: sear contour, cal. .30 (7319882).	1	---	-----	-----	---	12	2
			R	4933-731-9701	1—FIXTURE, COMPARATOR: trigger contour, cal. .30 (7319701).	1	---	-----	-----	---	12	3
			R	4933-731-7839	2—SCREEN, COMPARATOR: hammer contour, cal. .30 (7317839).	1	---	-----	-----	---	13	
			R	4933-731-7840	2—SCREEN, COMPARATOR: sear contour, cal. .30 (7317840).	1	---	-----	-----	---	14	
			R	4933-731-7838	2—SCREEN, COMPARATOR: trigger contour, cal. .30 (7317838).	1	---	-----	-----	---	15	

(1) Source, maintenance, and recoverability code				(2)	(3)	(4)	(5)	(6) 15-Day maintenance allowance per 100 equipments		(7)	(8) Illustration	
(a) Materiel numerical code	(b) Source	(c) Maintenance level	(d) Recoverability	Federal stock No.	Description	Unit of issue	Quantity incorporated in unit	(a) 3d Echelon (direct support)	(b) 4th Echelon (heavy support)	Depot maintenance guide per 100 equipments (5th echelon)	(a) Figure No.	(b) Item No.
					TOOLS AND EQUIPMENT—Continued							
					The following tool set is authorized and may be requisitioned by organizations authorized field maintenance small arms shop set 5180-754-0664-A18.							
			R	4933-775-0366	TOOL SET, FIELD MAINTENANCE, BASIC SMALL ARMS: (8426358). *Note:* See SM 9-4-4933-E04 for components.	1	---	*	*			

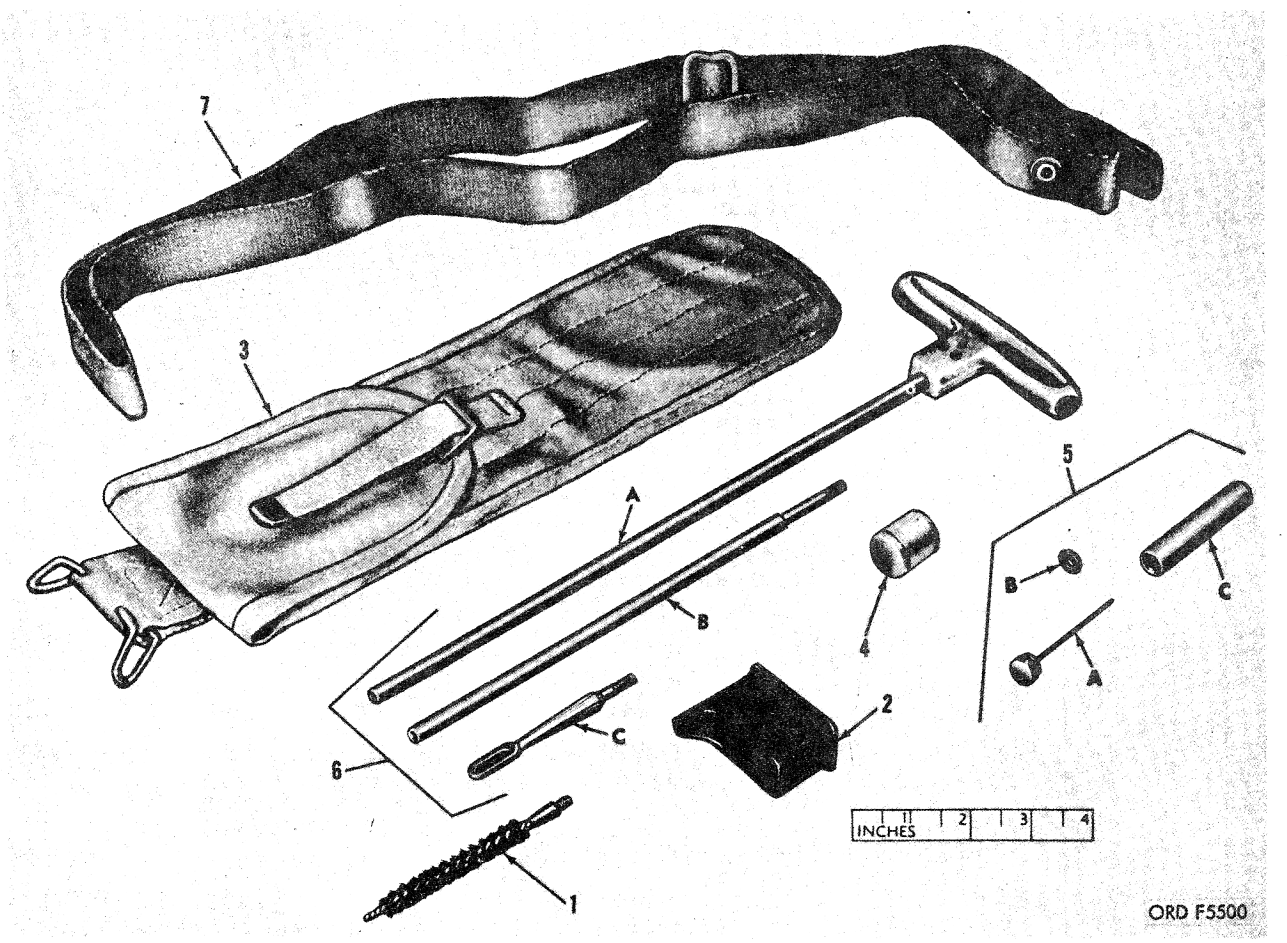

5A—Cap 5196480
5C—Tube 5196481
6A—Handle with first section
6B—Section, second 6243575

Figure 9. Tools and equipment.

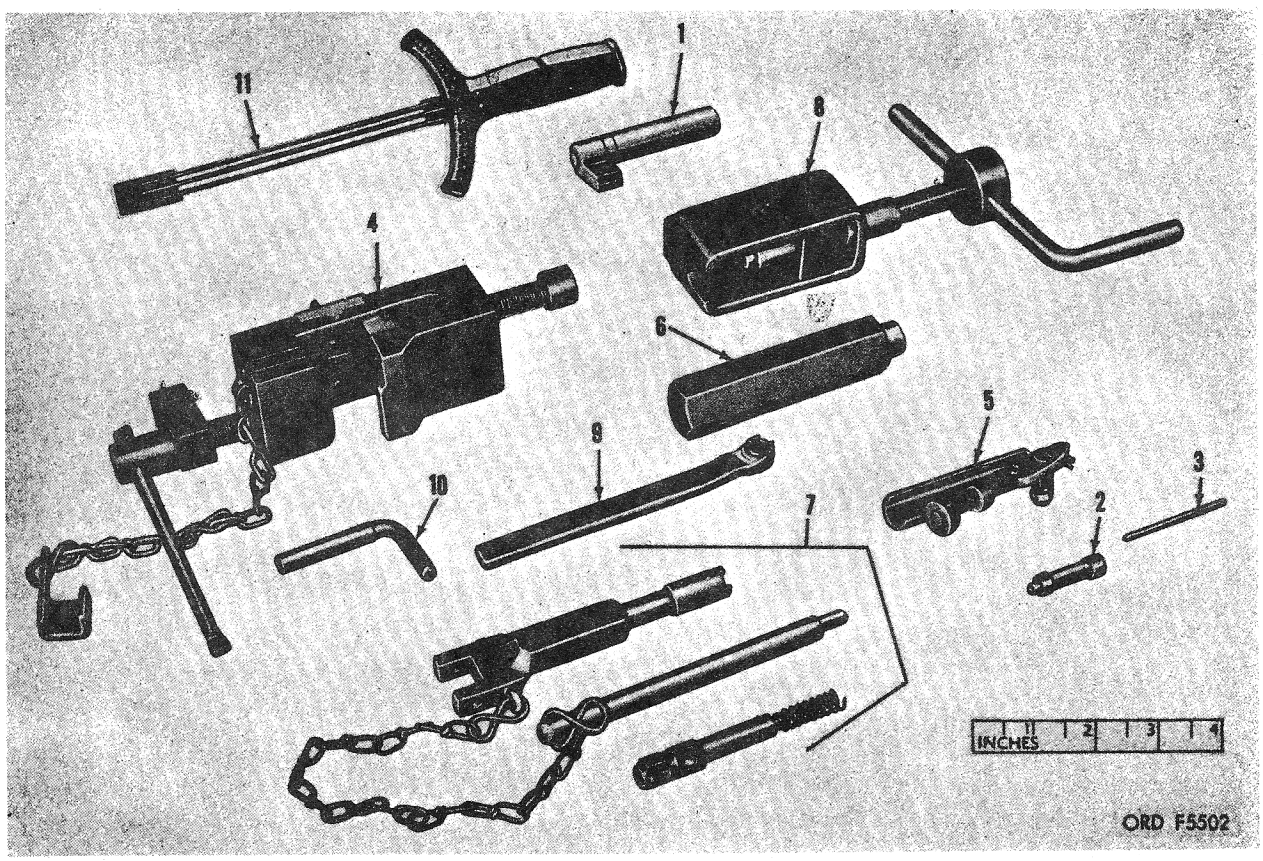

Figure 10. Tools and equipment.

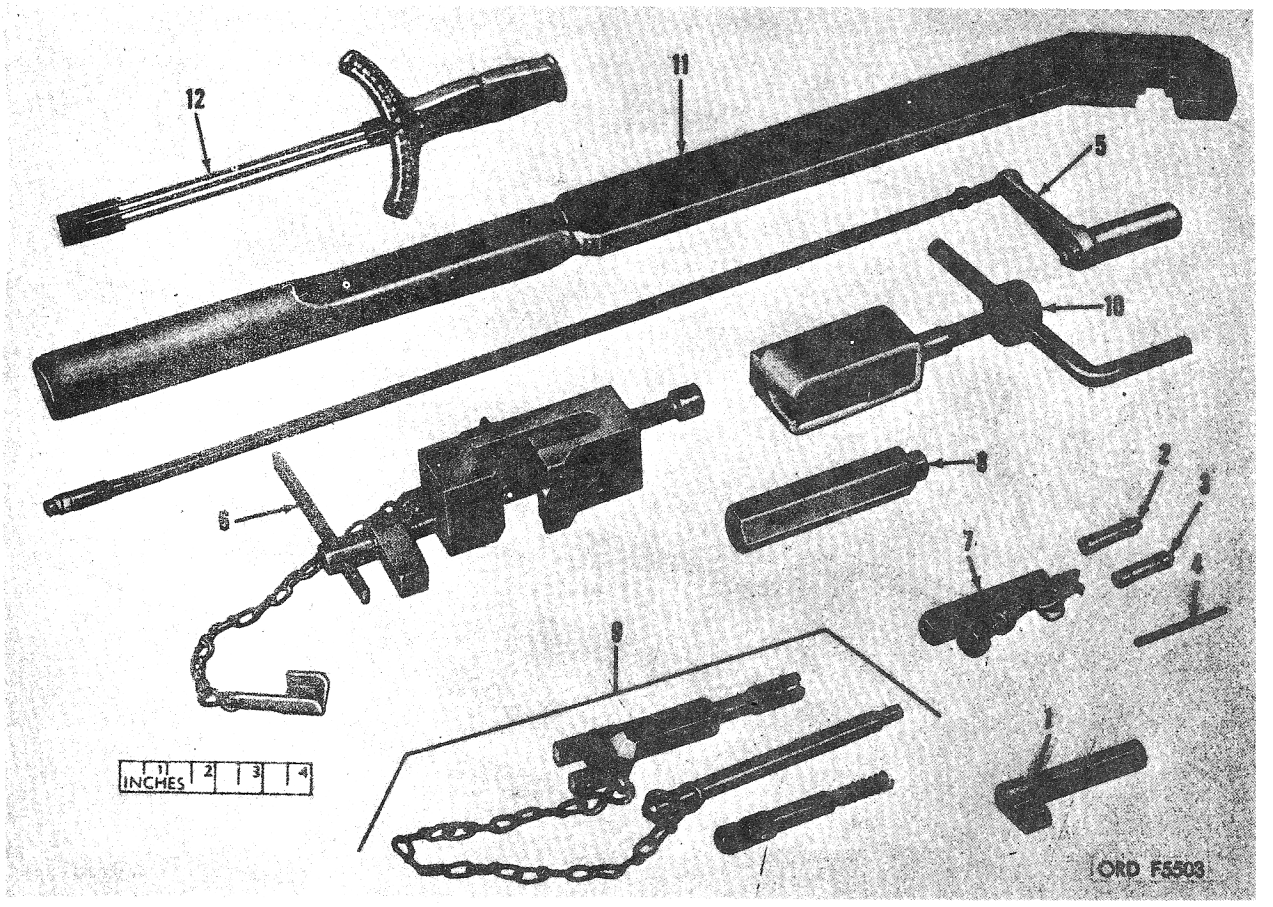

Figure 11. Tools and equipment.

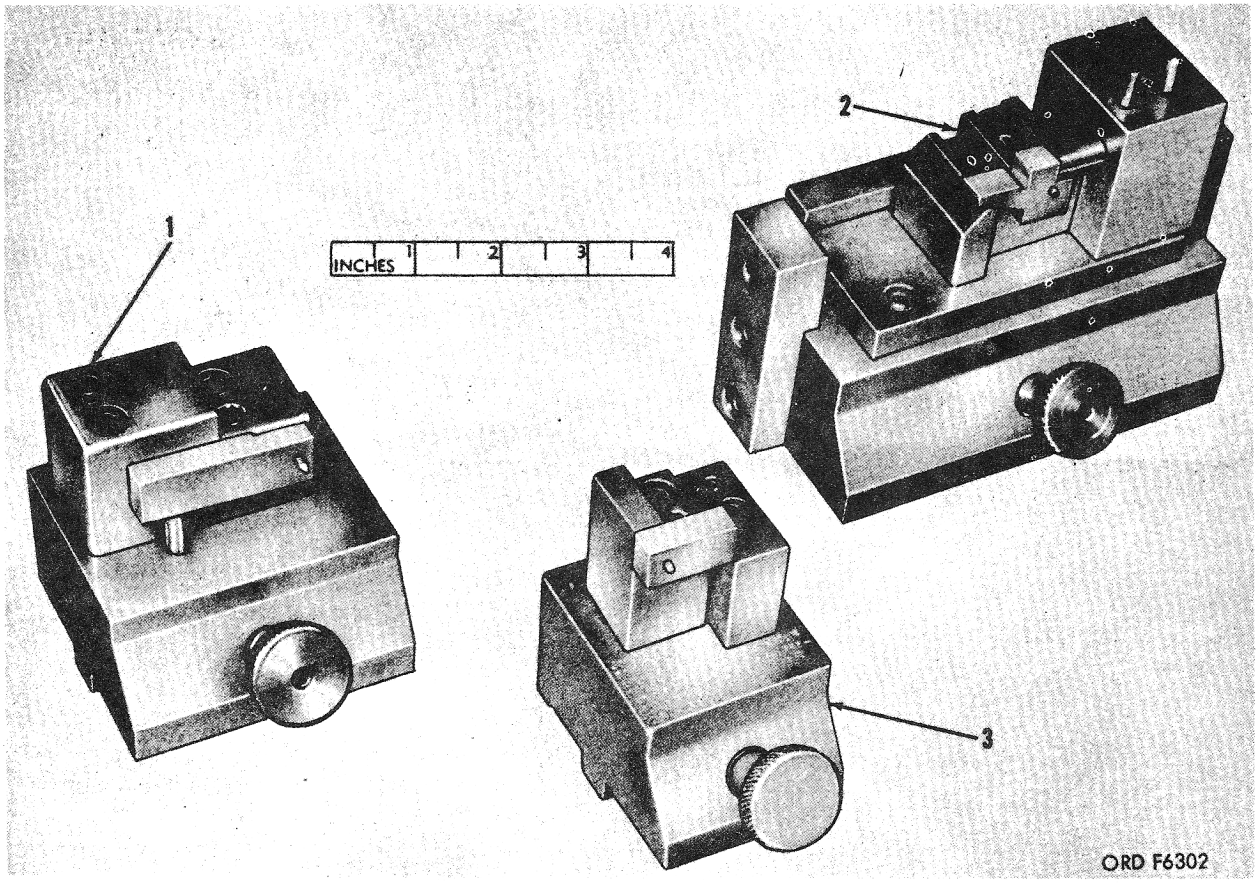

Figure 12. Fixtures for comparators.

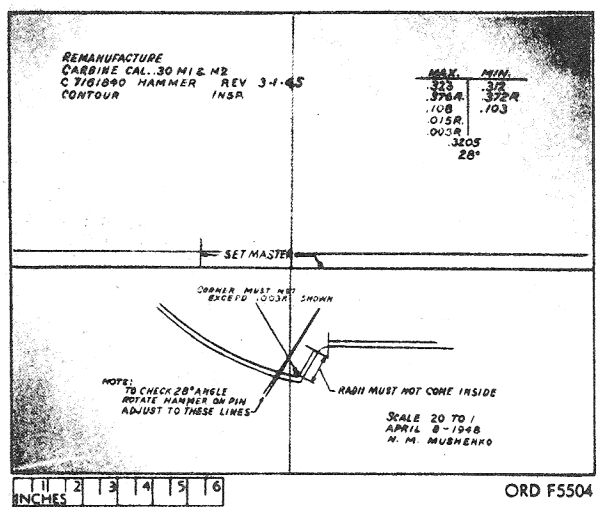

Figure 13. Comparator screen—7317839.

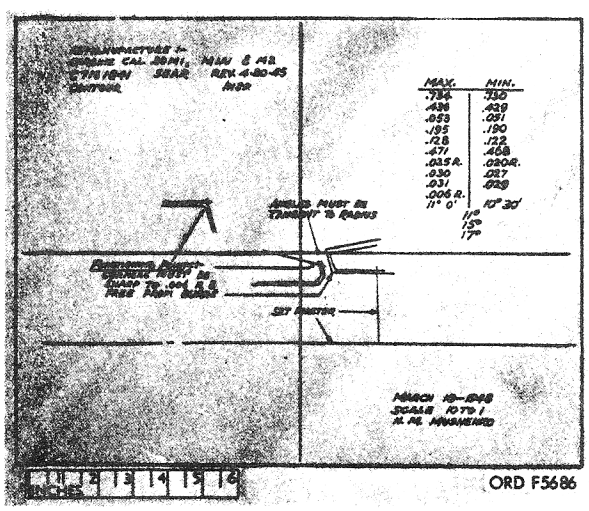

Figure 14. Comparator screen—7317840.

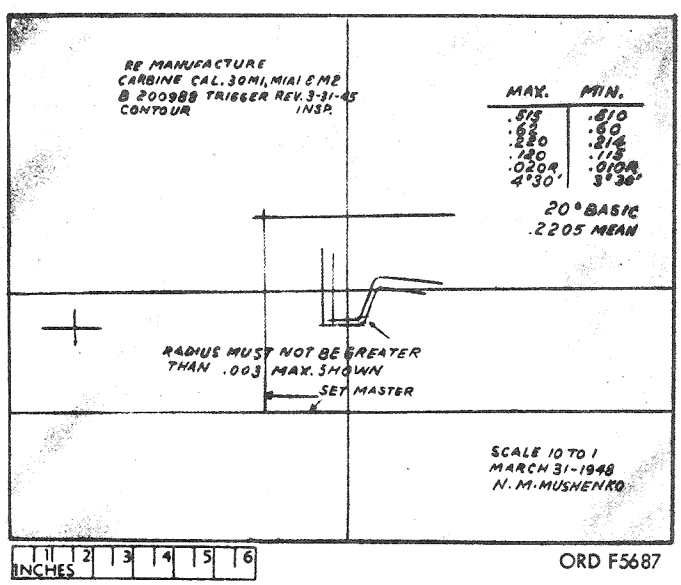

Figure 15. Comparator screen—7317838.

By Order of Secretary of the Army:

EARLE G. WHEELER,
General, United States Army,
Chief of Staff.

Official:
J. C. LAMBERT,
Major General, United States Army,
The Adjutant General.

Distribution:

Active Army:

USASA (2)
DCSLOG (1)
CNGB (1)
CofEngrs (1)
CSigO (1)
TSG (1)
USAATBD (3)
USAMC (5)
USAOCDA (2)
USCONARC (3)
ARADCOM (2)
ARADCOM Rgn (2)
OS Maj Comd (2) except
  USAREUR (3)
  USARJ (3)
OS Base Comd (2)
LOGCOMD (2)
MDW (2)
Armies (3) except
  Sixth US Army (1)
Corps (2)
Div (2)
Bde (2)
Regt/Gp/bg (2)
Bn (2)
GENDEP (OS) (1)
Ord Sec, GENDEP (OS) (1)
Ord Dep (OS) (2)
Army Dep (2) except
  Lexington Army Dep (3)
  Tooele Army Dep (12)
  Letterkenny Army Dep (10)
USAMOCOM (2)
USAWECOM (60)
USASMCOM (2)
USAMICOM (2)
USAECOM (2)
USAMUCOM (2)
USATECOM (2)
Arsenals (5)
Proc Dist (2)
POE (1)
Army Tml (1)
USAOSA (1)
USA Corps (2)

NG: State AG (3)1 Units—Same as Active Army except allowance is one copy for each unit.
USAR: Units—Same as Active Army except allowance is one copy for each unit.
For explanation of abbreviations used, see AR 320-50.